ASSEMBLY DESIGN (*AsD*)

ANALYZE

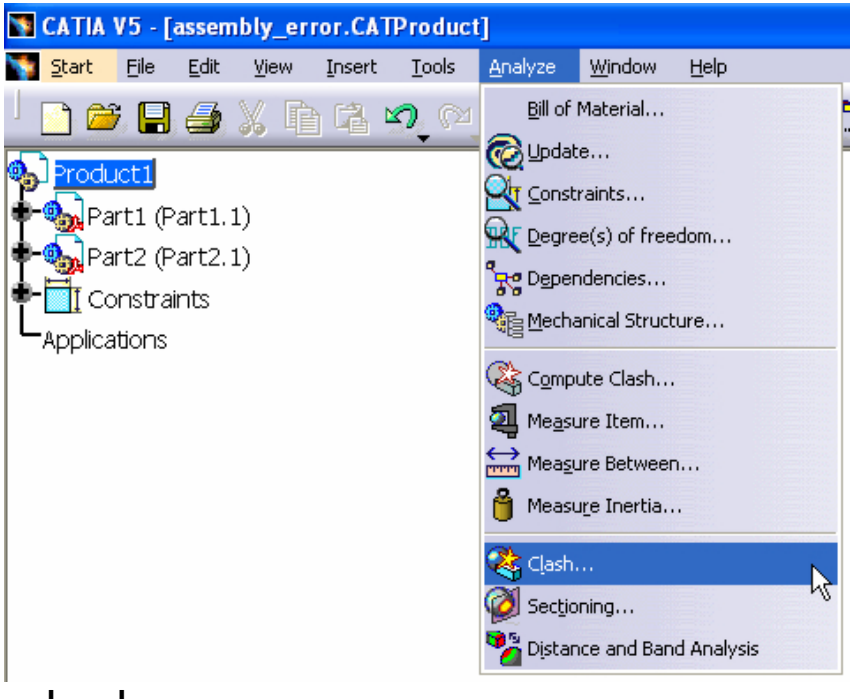

To start workbench choose:

Start / Mechanical Design / Assembly Design

This workbench contains tools for assemblies creation.

Errors in Assembly Components

Open the file named *assembly_error.CATProduct*.

1. Create coaxiality of both elements by using *Coincidence Constraint.* 

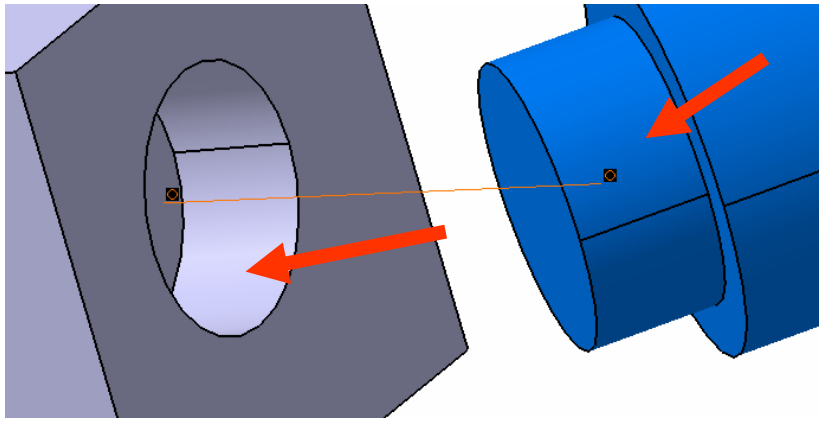

2. Create connection of the flank surfaces of both elements by using *Contact Constraint.* 

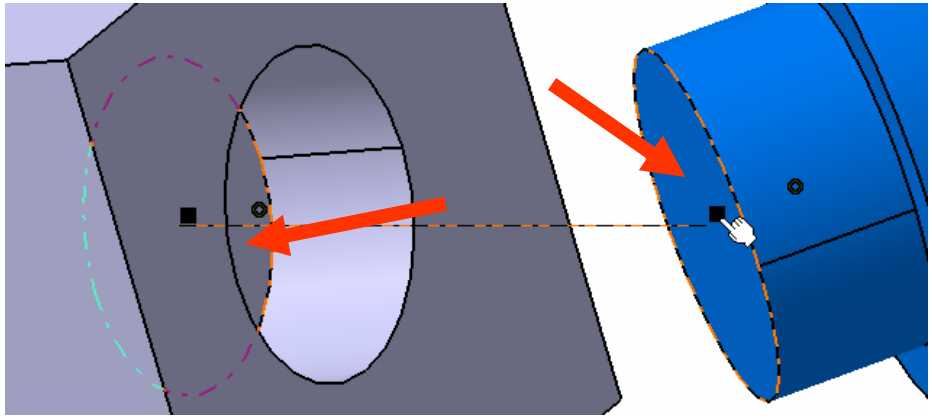

Errors in Assembly Components

3. Create connection of the cylindrical surfaces of both elements by using *Contact Constraint.* 

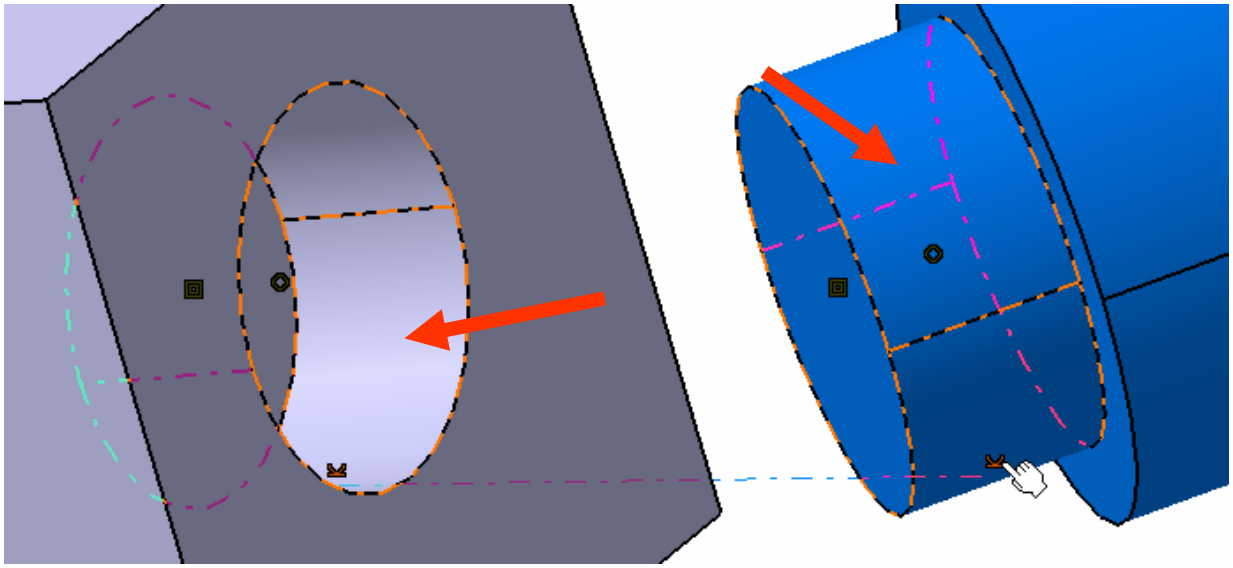

4. *Update* your assembly. 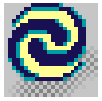

Errors in Assembly Components

The *Update Diagnostic* windows appears There is information about all refreshed constrains. As you can see, some constrains are *Solved* and some are *Ignored*. This windows appears only if some errors occurs. You can use that lists to find the error and try to solve them.

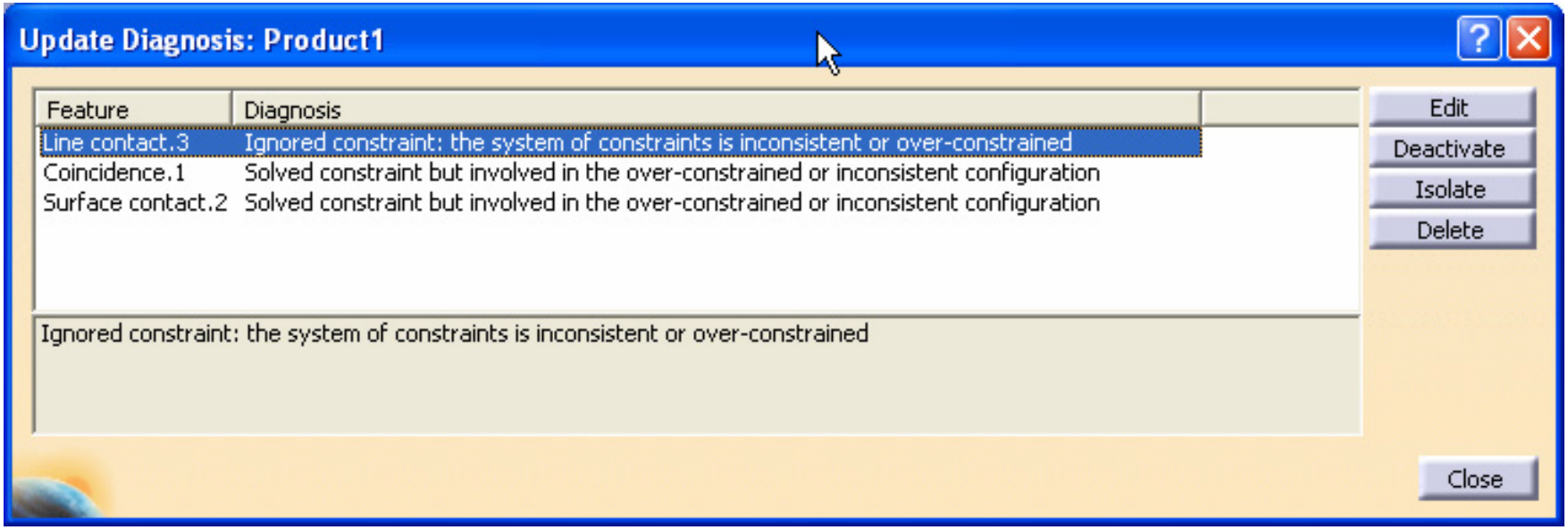

Errors in Assembly Components

Select first position on list. According to your choice the constraint sign will be selected on the screen (the orange colour sign). Use *Edit* button to check properties for that constraint.

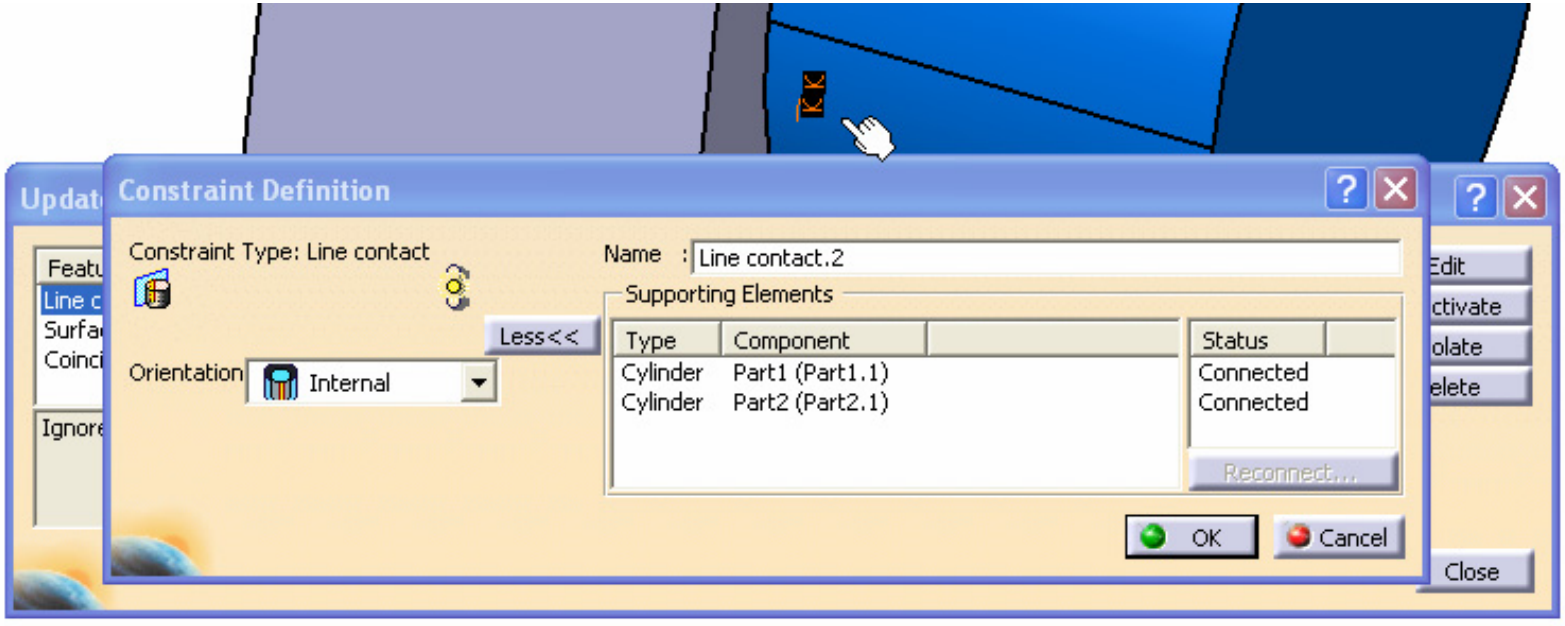

Now you can check constraint properties. Everything seems to be OK…

Using Space Analysis Toolbox

Select ***Analyze*** option in *Pull Down* menu or activate ***Space Analysis Toolbar***.

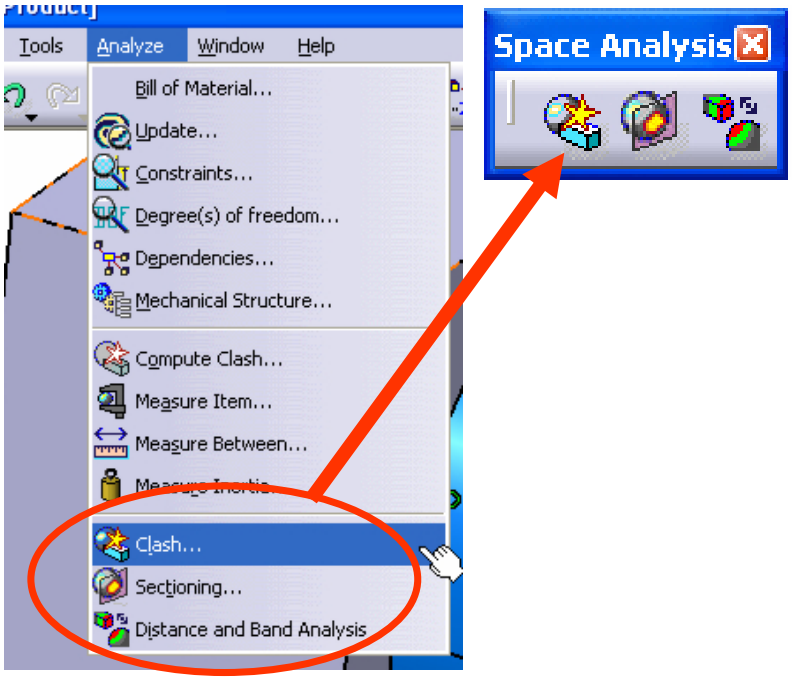

Space Analysis - *CLASH*

Clash command investigates for interferences in your document. Select *Clash* option – *Check Clash* window appears.

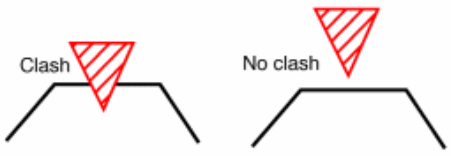

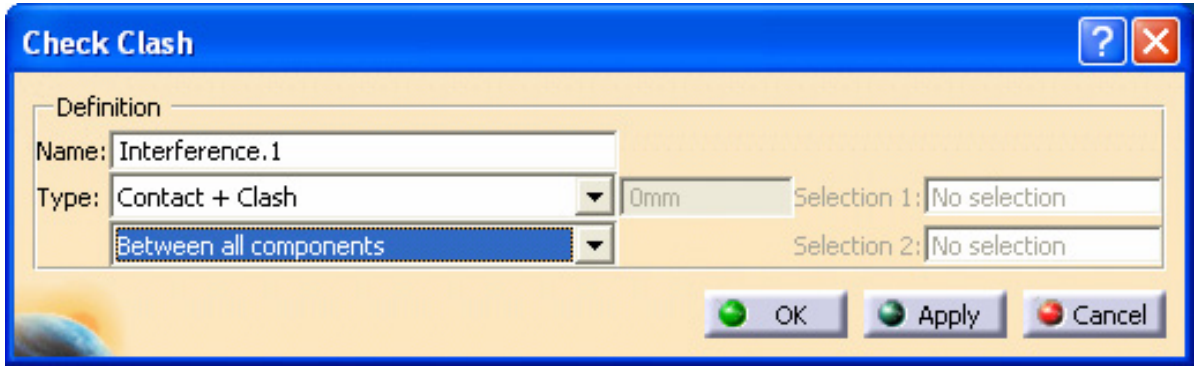

The default interference analysis is detecting clashes and contacts between all components in the document.

Two interference types are available:

Contact + Clash: checks whether two products occupy the same space zone as well as whether two products are in contact.

Clearance + Contact + Clash: In addition to the above, checks whether two products are separated by less than the pre-defined clearance distance.

Space Analysis - *CLASH*

Select *Apply* button to calculate the clashes for all components.

The list of conflicts is added to previous window. All intersections are displayed on screen.

You can select *Results Window* icon to view specified clash is separate window.

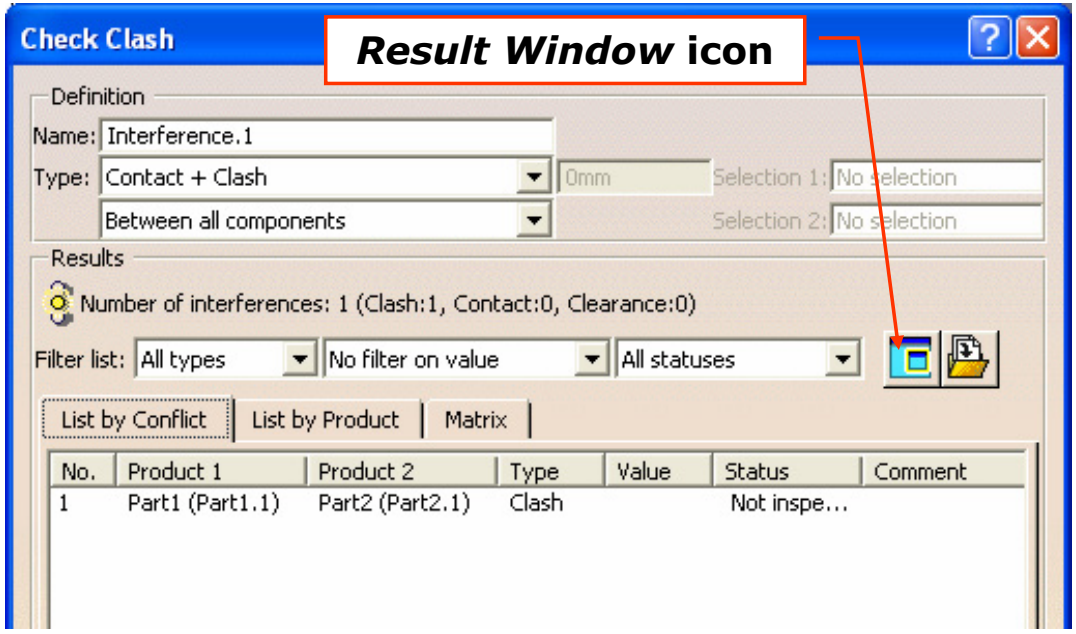

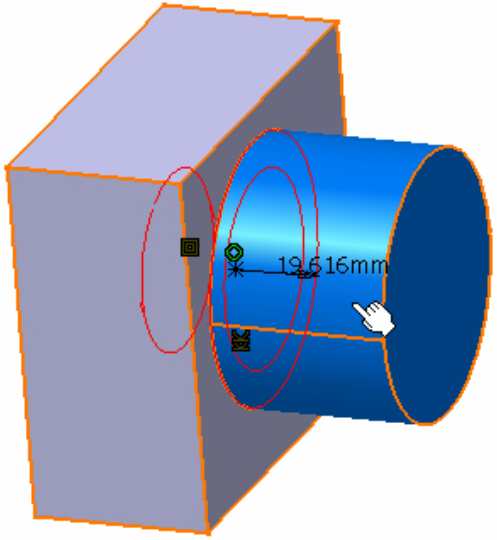

Space Analysis - *CLASH*

Reading Clash Command Results

Interference results differ depending on the interference type selected for the analysis. The following illustrates expected results for the different analysis combinations.

Contact + Clash

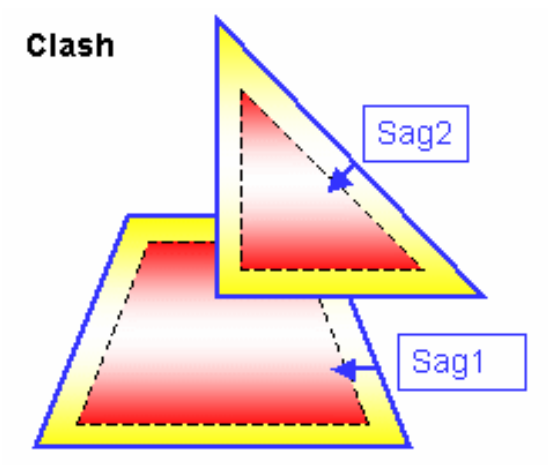

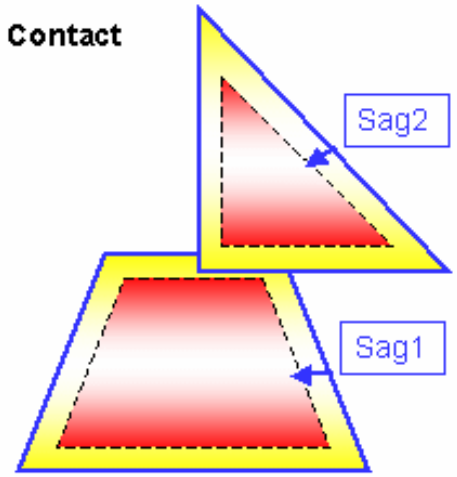

If red zones overlap, a clash is detected. If yellow zones only overlap, a contact is detected.

Note: sag (yellow zone) is offset from the skin inwards.

If the minimum distance between the yellow zones is less than the total sag (sag1 + sag2), a contact is detected.

Space Analysis - *CLASH*

Reading Clash Command Results

Clearance + Contact + Clash

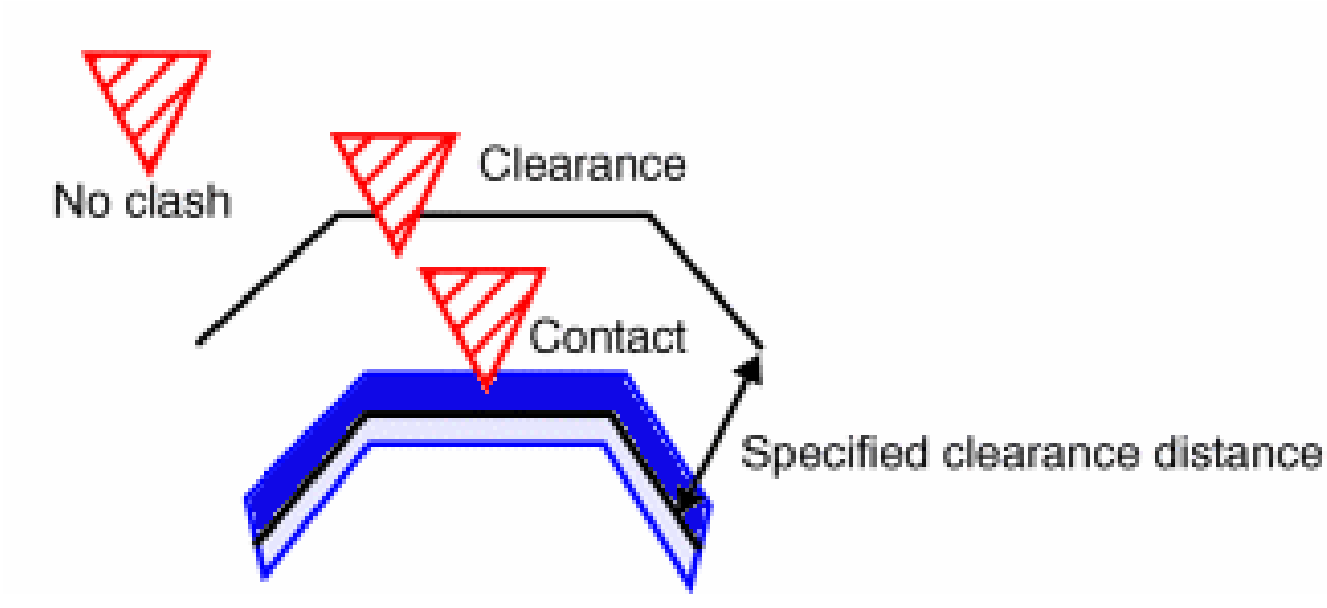

Space Analysis - *CLASH*

Sag

The sag is set by ***3D Accuracy*** parameter n the *Performances* tab of *Tools / Options / General / Display*. By default, this value is set to 0.2 mm. The sag value set in this tab is offset from the skin inwards on both selection 1 and selection 2.

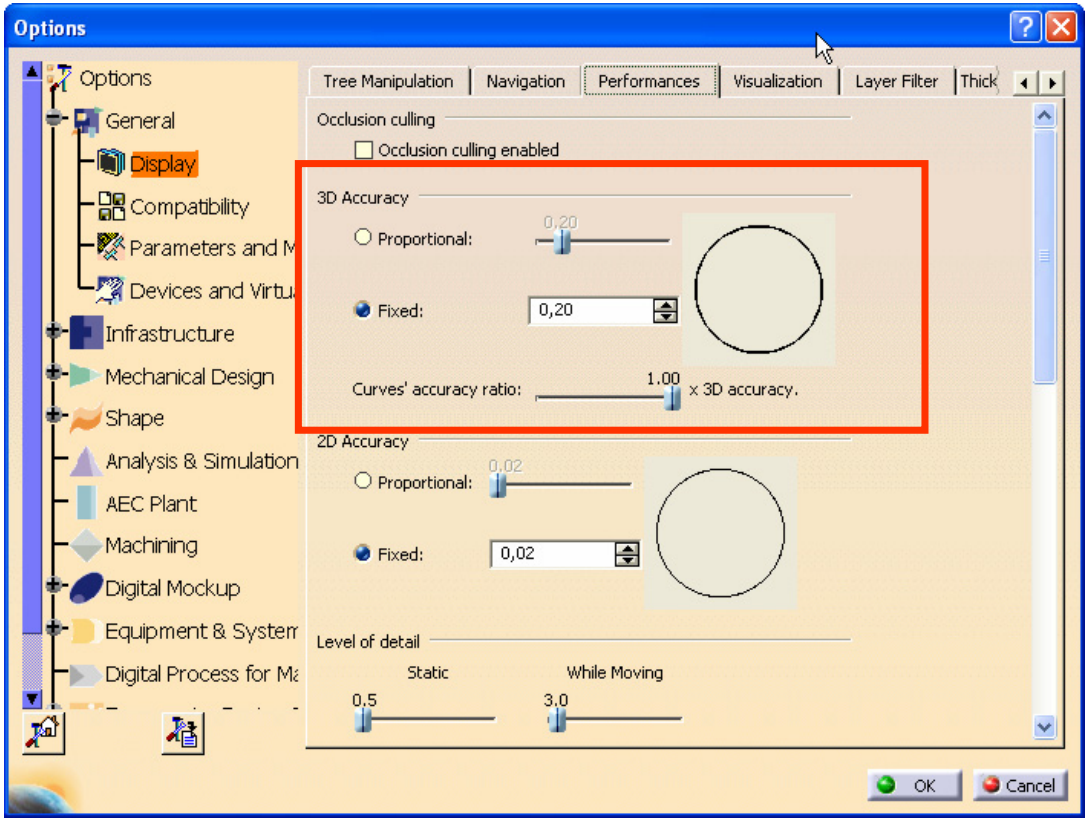

Space Analysis - *SECTIONING*

Creates section planes and orient the normal vector of the plane.

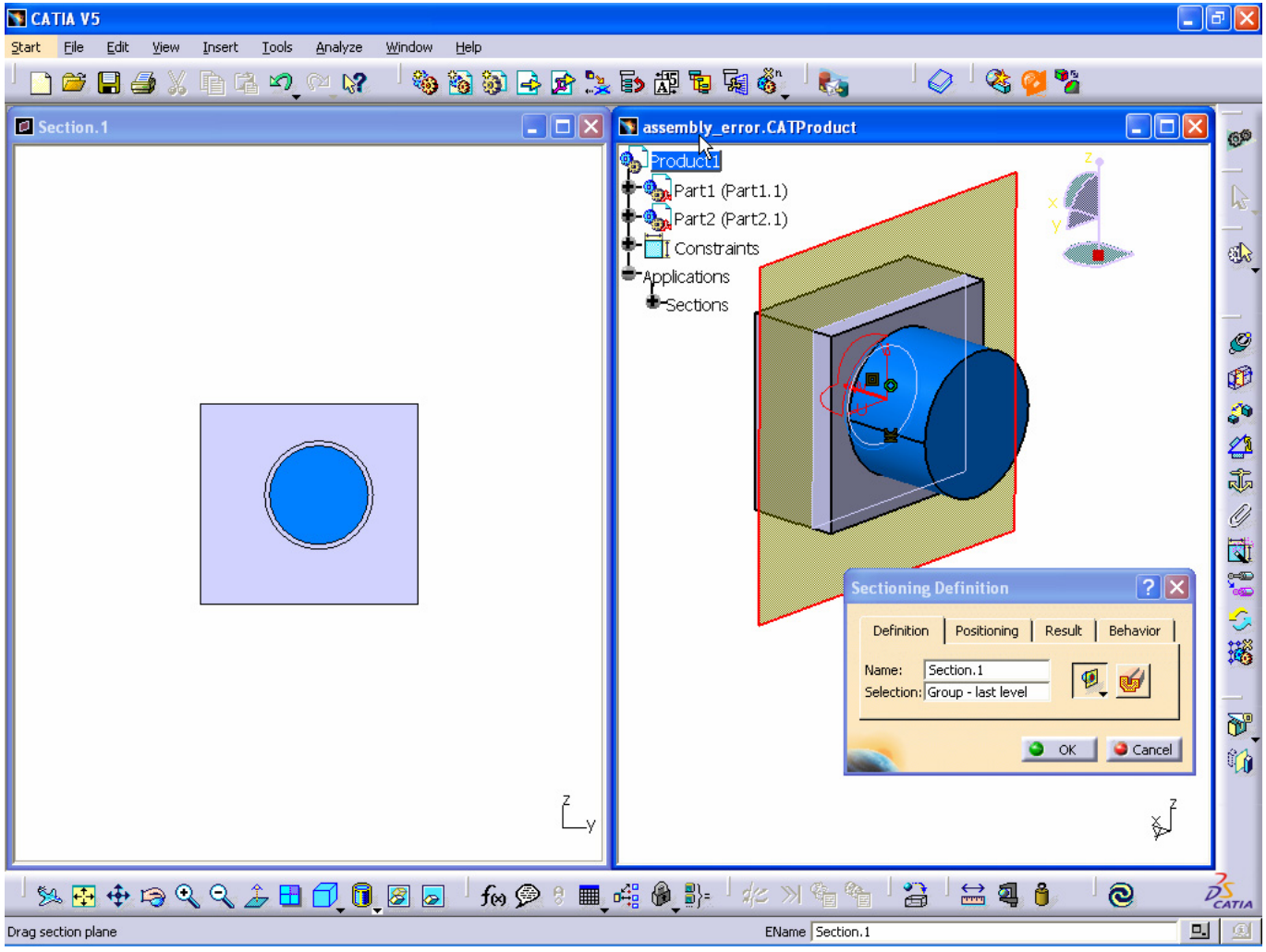

Space Analysis - *SECTIONING*

Use *Volume Cut* button to remove the body and to see section plane view.

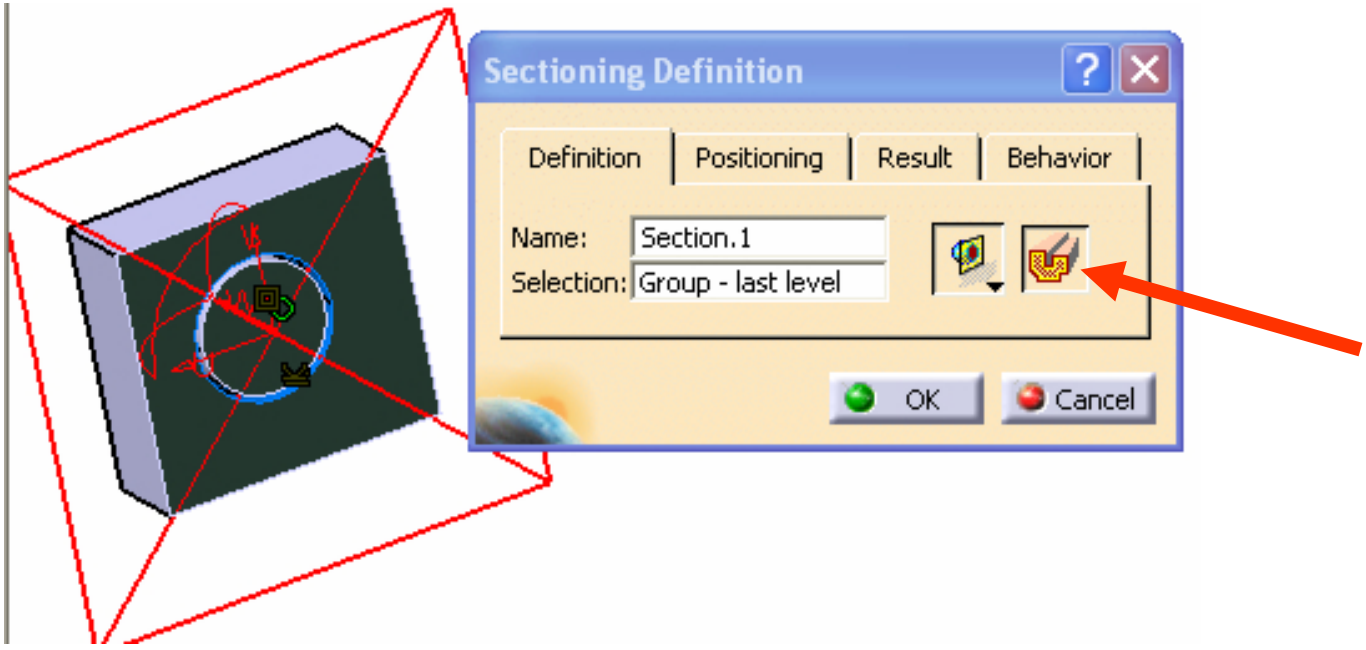

Manipulating Section Plane Directly: Create a section plane, drag plane edges to re-dimension, drag plane to move it along the normal vector, press and hold left and middle mouse buttons down to move plane in U, V plane or local axis system or drag plane axis to rotate plane.

Space Analysis - *SECTIONING*

Positioning the plane (*Positioning* tab)

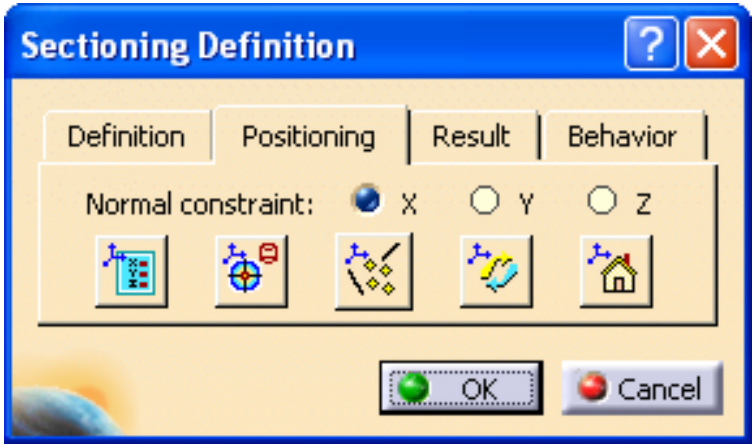

Geometrical Target: Create a section plane, click the icon then point to the target of interest (e.g. surface, axis).

Select 2 lines or 1 point and 1 line to create plane.

Change direction of normal vector to the plane.

Click the Reset Position icon to restore the center of the plane to its original position.

Space Analysis - *SECTIONING*

Result display (*Result* tab)

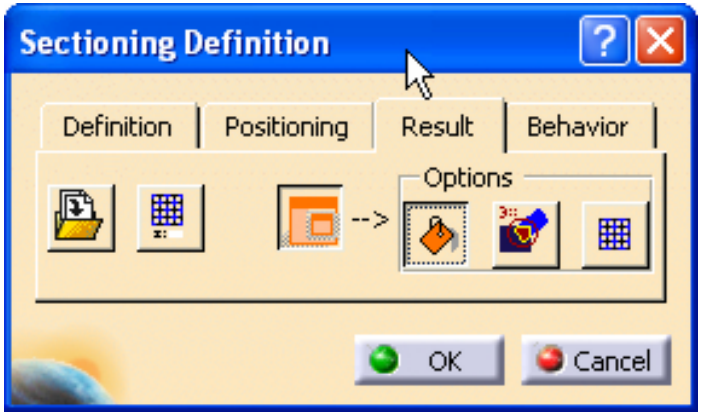

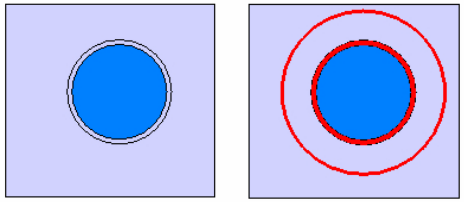

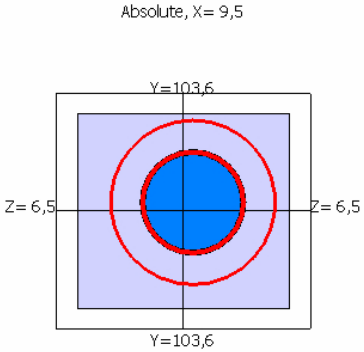

Results Window: Open/Close new window for results view.

Section fill: adds / removes fill effects.

Clash Detection: Activates / Deactivates clash detection.

Grid: turn on / off grid on result window.

Space Analysis - *SECTIONING*

Try to manipulate section plane to obtain section along axis of symmetry for analyzed assembly.

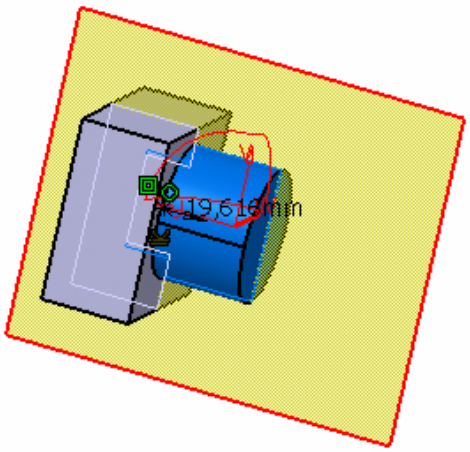

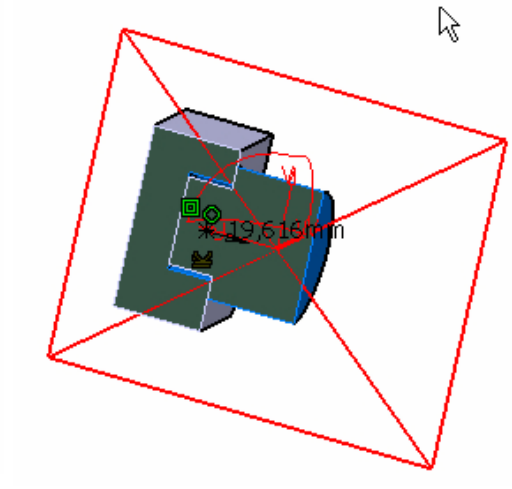

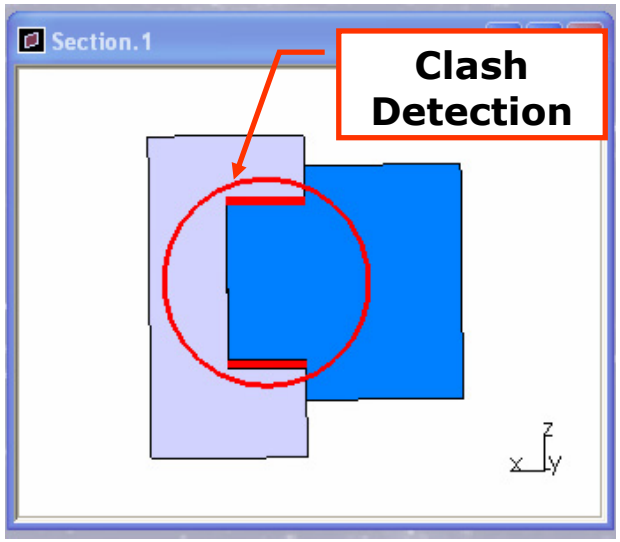

The intersection between components occurs. It is necessary to change some dimensions.

Now our error is recognized and it can be solved.

Direct access to Part Design Workbench

To start *Part Design Workbench* from *Assembly Design* just double-click on selected part on screen or on the ***Part*** element on the tree.

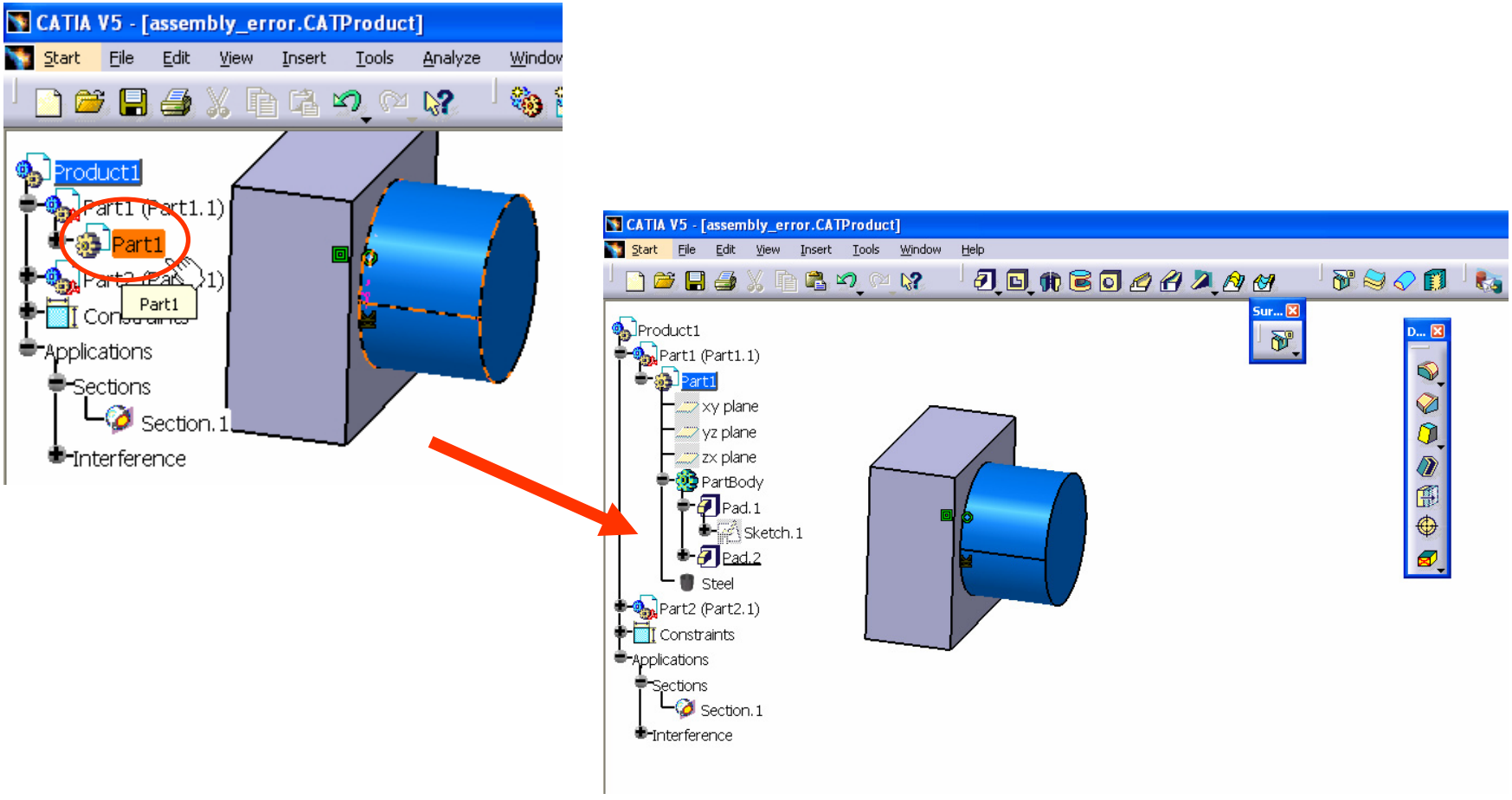

Direct access to Part Design Workbench

Double-click on the shaft to get access to their dimensions.

Change radius (R22) of the pin to 20mm.

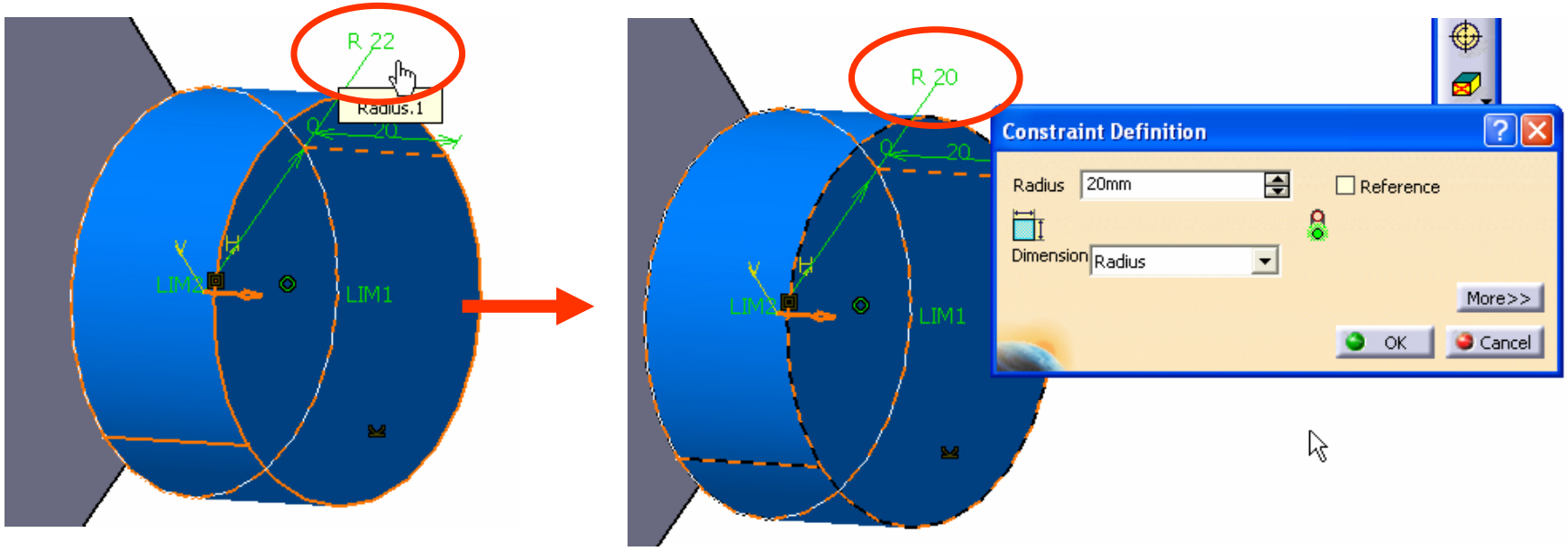

Confirm all changes by using OK button.

Direct access to Part Design Workbench

To back to *Assembly Design Workbench* double-click on *Assembly Product Name* on the tree.

Update your assembly.

There should be no errors more.

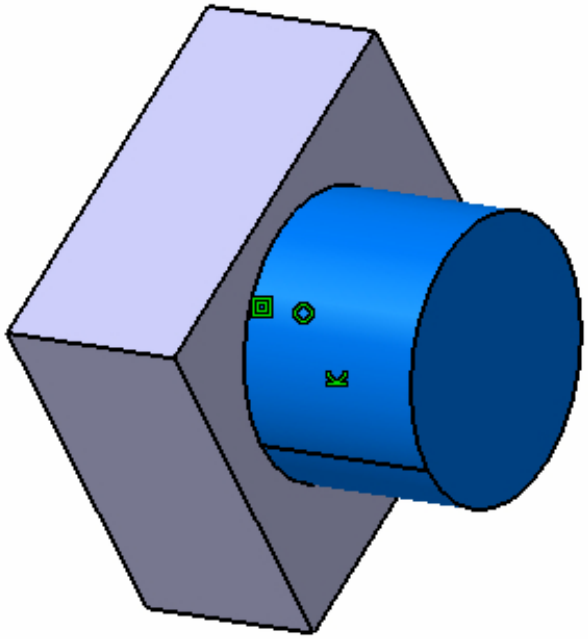

Analyze: *BILL OF MATERIAL*

Open the file named *Gear_Assembly.CATProduct*.

Select *Analyze/Bill of Material* option in *Pull Down Menu* to obtain description of all parts in assembly.

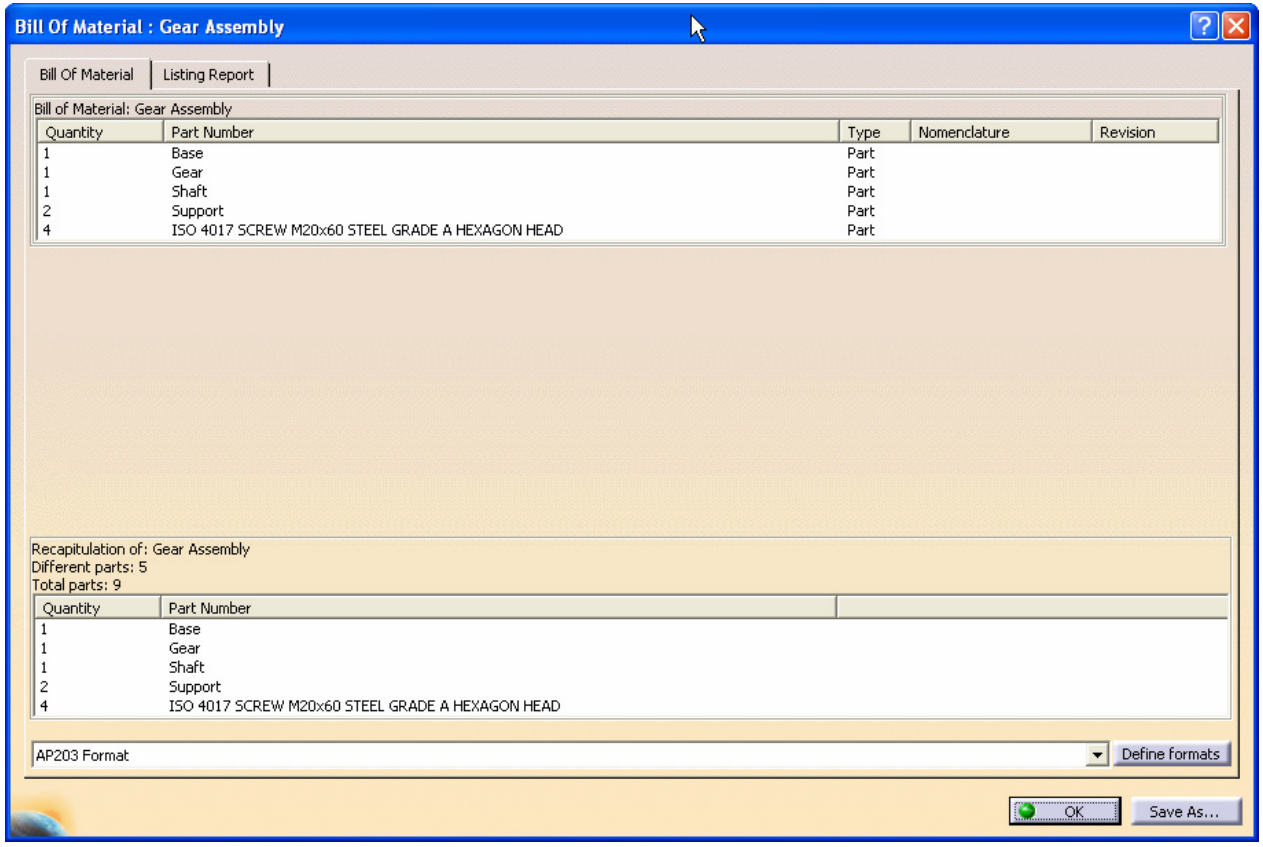

Analyze: *MEASURE*

Select *Analyze/Measure Between* to measure distance and angle between selected elements (axis, plane).

Point first plane then second plane – distance and angle between them will be displayed on green rectangle.

Select *Keep measure* check-box to add measurement to the assembly.

Now you can select other elements.

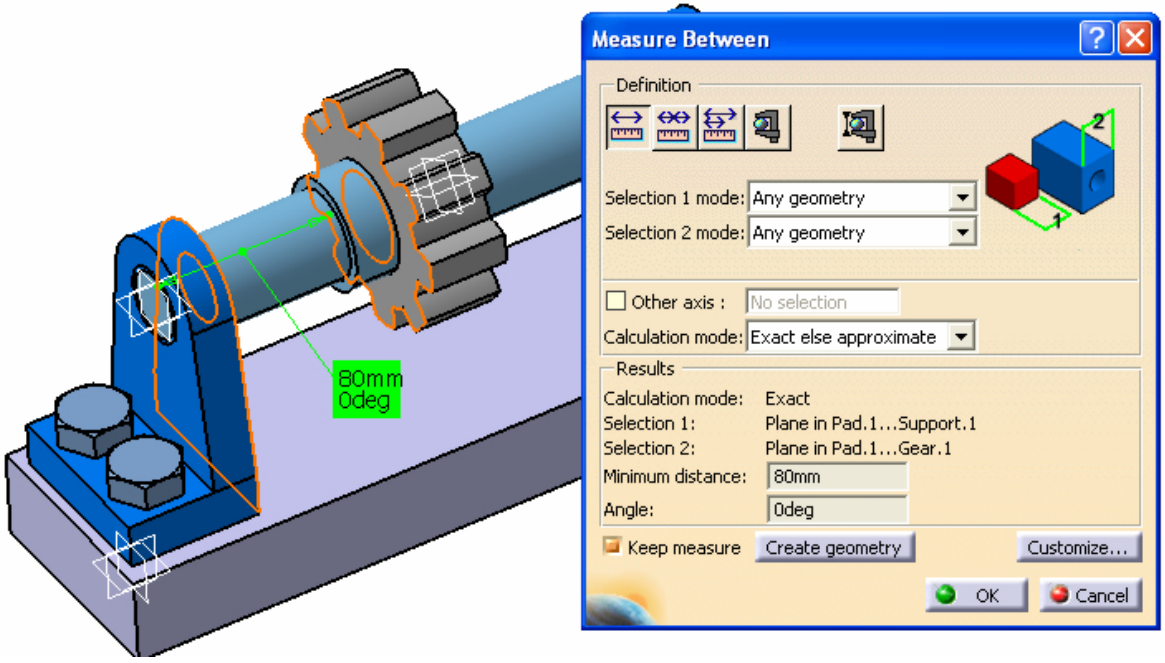

Analyze: *MEASURE*

Use *Analyze/Measure Item* to obtain information about selected element.

Select *Keep measure* check-box to add measurement to the assembly.

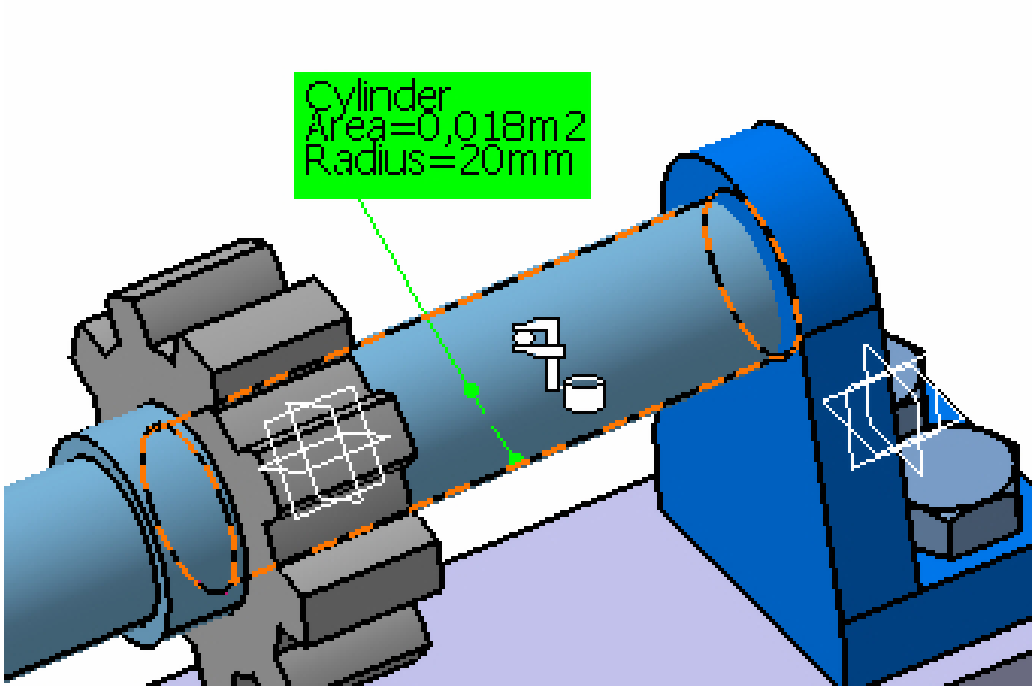

Analyze: *MEASURE*

Select *Analyze/Measure Inertia* to measure inertia properties of the selected elements or whole assembly.

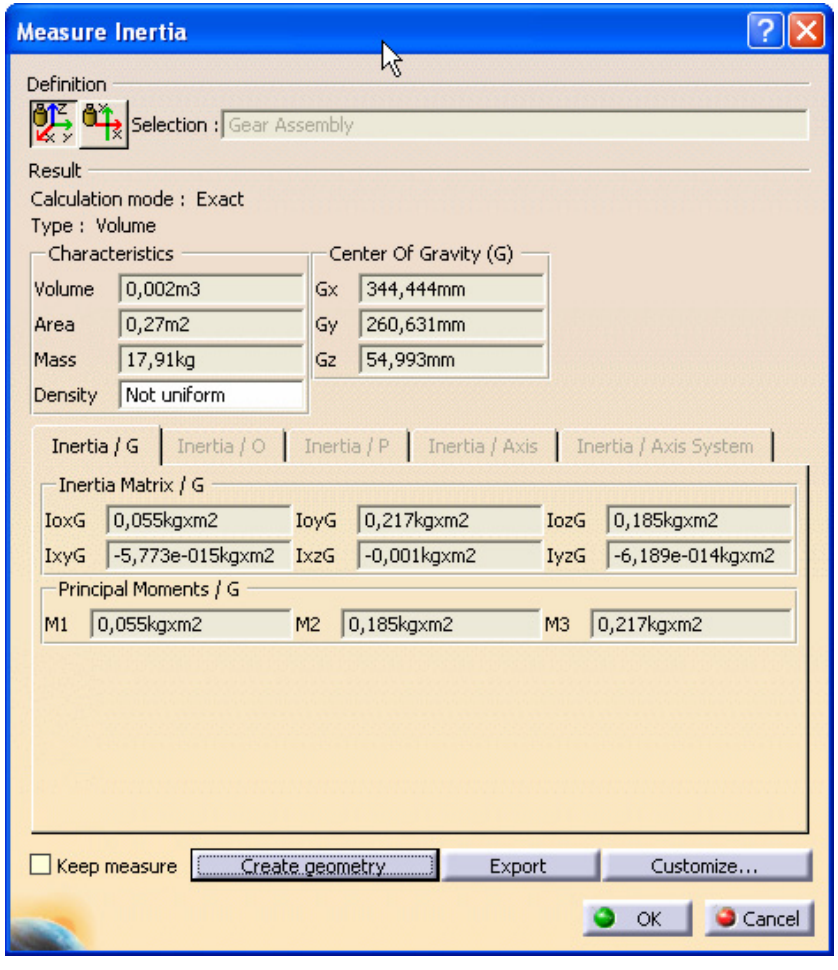

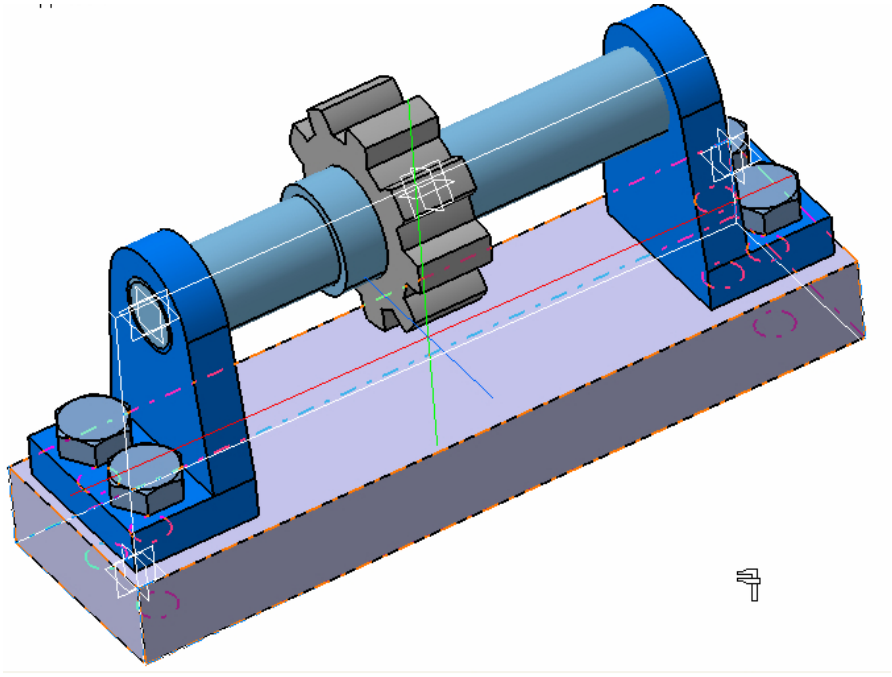

Move Toolbar: *EXPLODE*

Exploding the view of an assembly means separating the components of this assembly to see their relationships.

Select *Explode* icon from *Move Toolbar* – Explode Option window appears.

You can select whole assembly by selecting product on the tree or few components by using *Ctrl* key.

To deselect element click on them once again.

Move Toolbar: *EXPLODE*

Select *Definition*:

Depth – it is used for complex product structure. Defines, if the subassemlies will be exploded (All levels) or no (First level)

Type – define how the product should be exploded: *3D*, *2D* method or respecting constraints (*Constrained*)

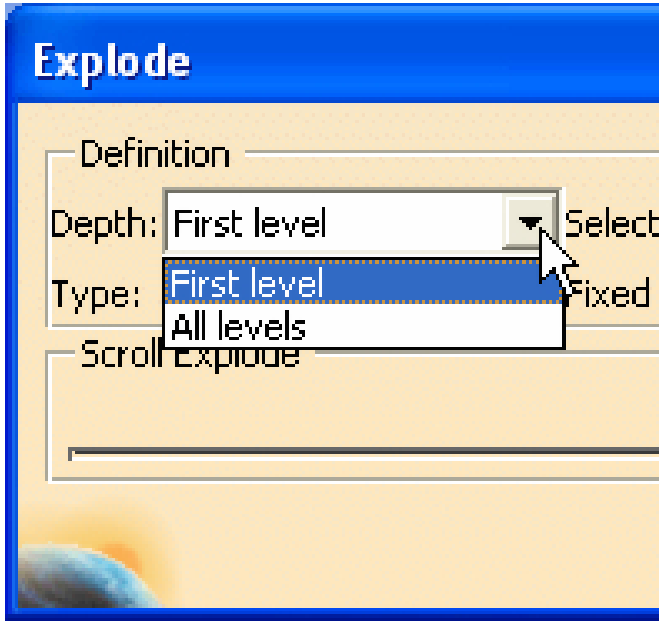

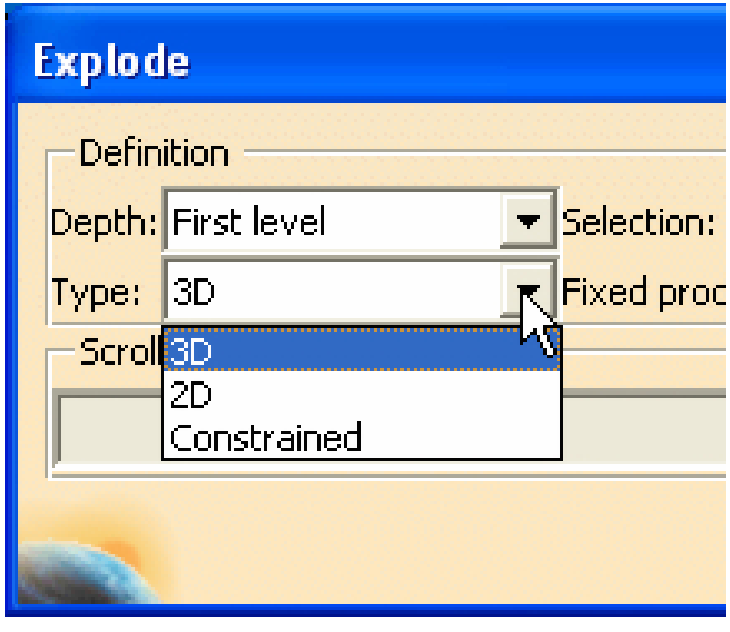

Move Toolbar: *EXPLODE*

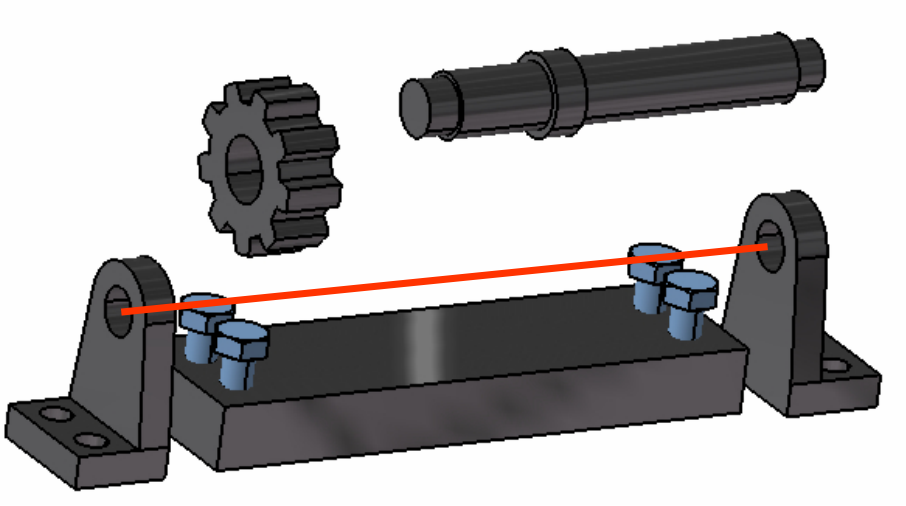

3D type explode

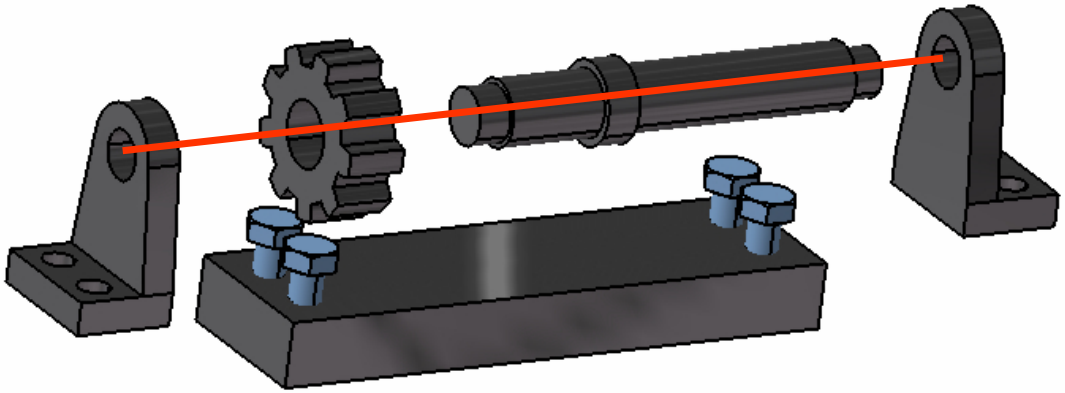

Constrained type explode

Assembly Drafting

Remember: before drafting select all components which should not be hatching in section view and change their properties.

Select that elements on the tree and by using *Contextual Menu* activate *Properties* option.

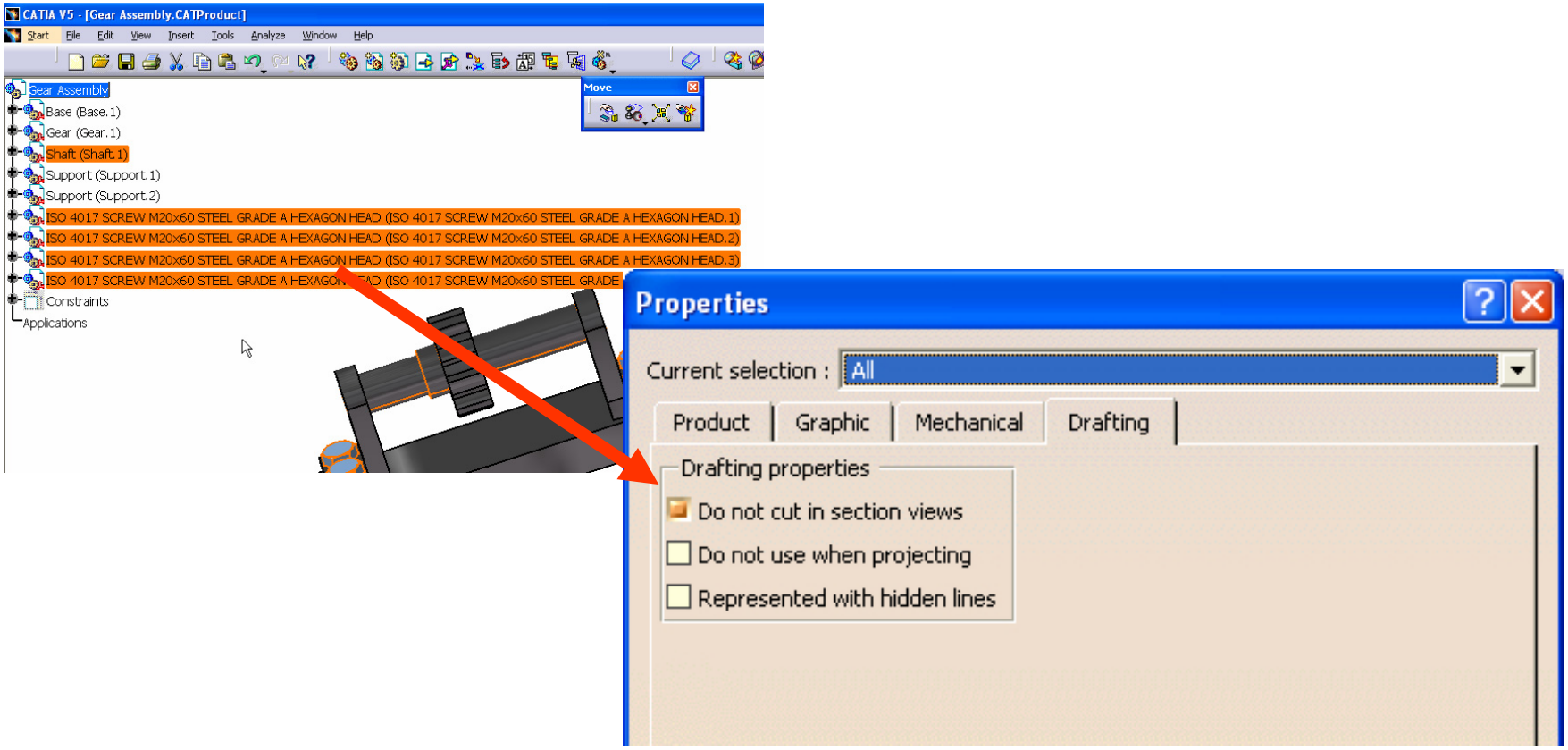

Assembly Drafting

To generate drafting choose ***Start/Mechanical Design/Drafting*** and select empty sheet in A0 size. Then press OK. button to start drafting.

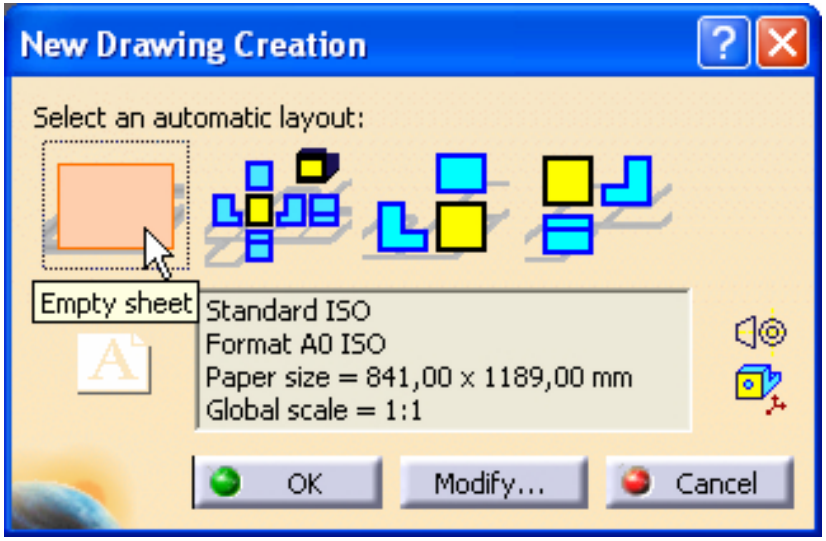

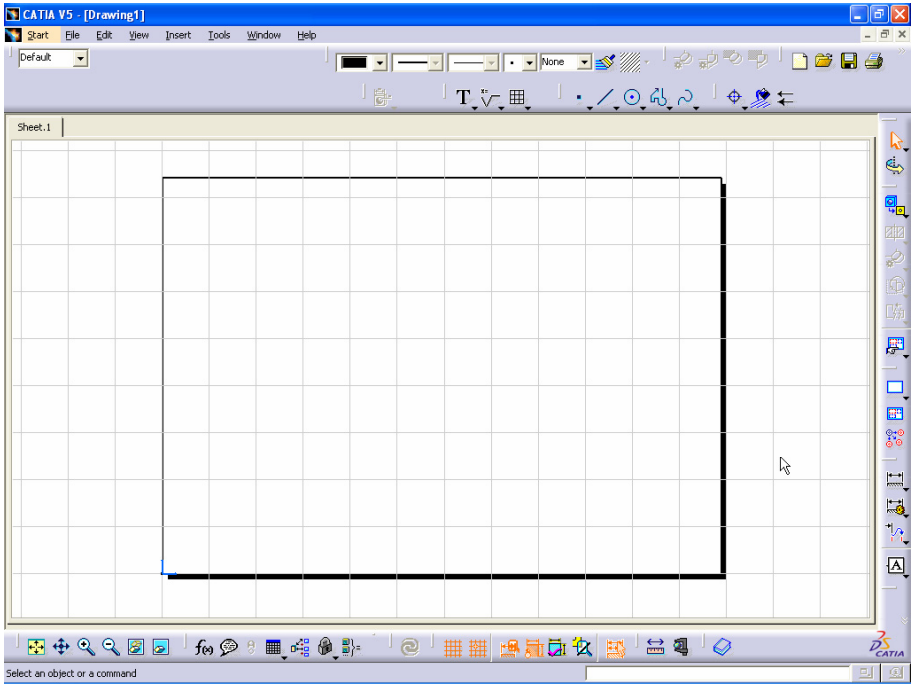

Assembly Drafting

Select *Front View* and select reference plane (the upper surface of the base part) on the assembly (use *Window* option to change workbench). Accept front view in drafting.

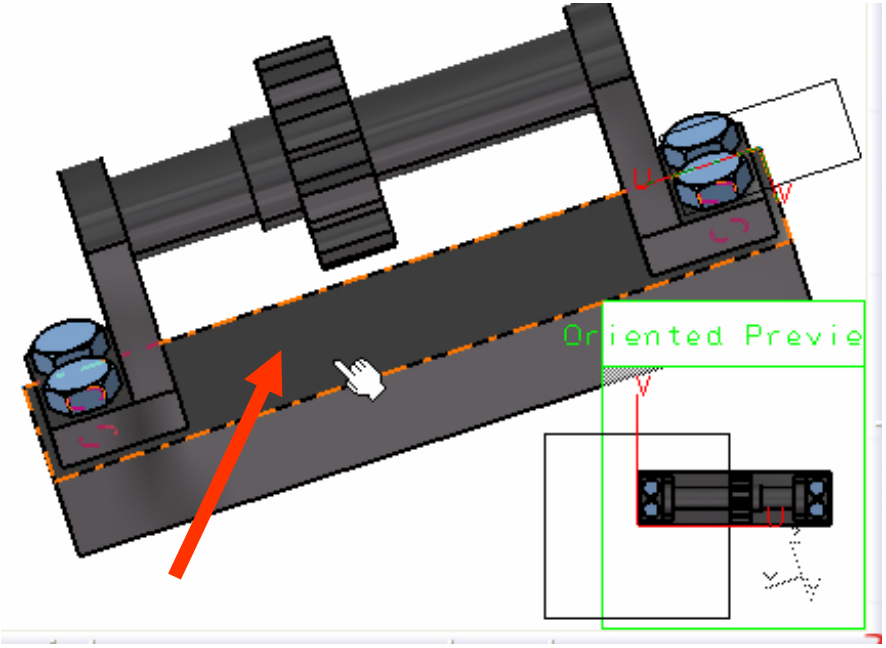

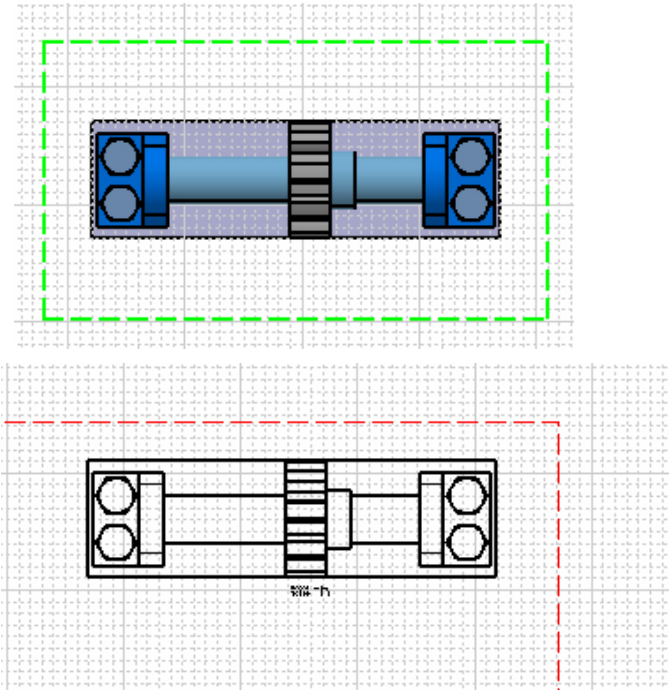

Assembly Drafting

Click the *Offset Section View* icon  and lead broken section plane.

Place *Section View* over the *Front View*. As you can see, the shaft and the screw are not hatched.

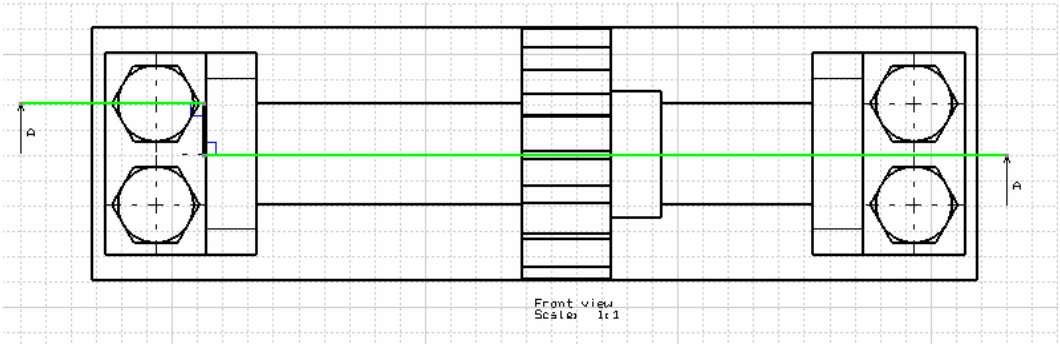

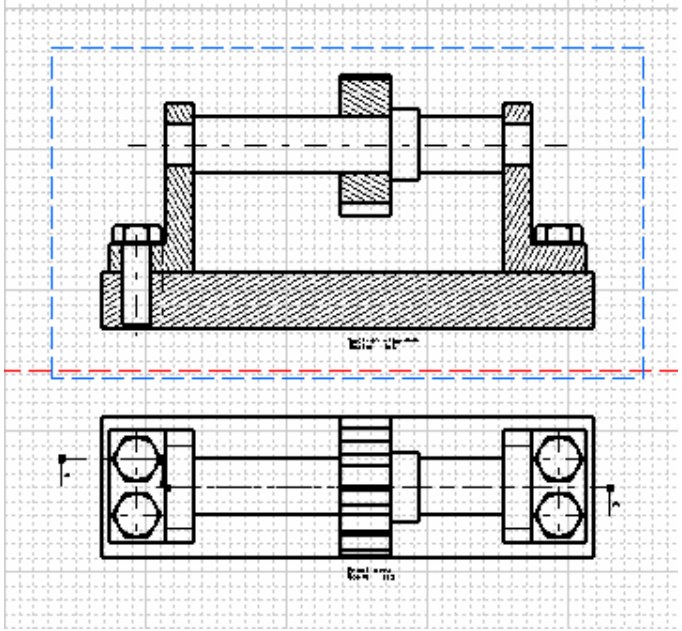

Assembly Drafting – *BILL OF MATERIAL*

Select ***Insert/Generation/Bill of Material*** option.

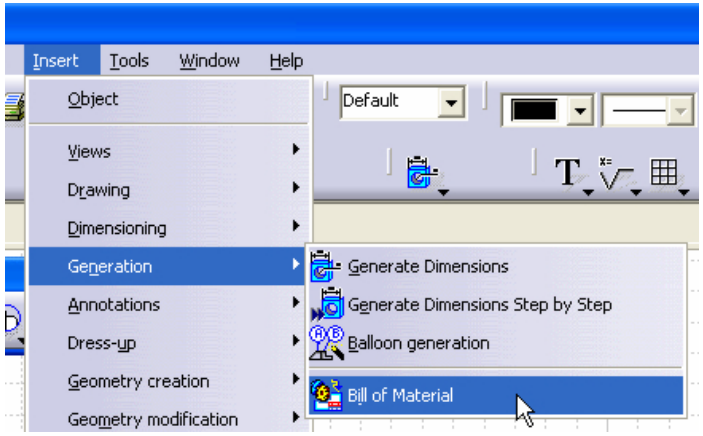

Click on the sheet to put list in your drafting.

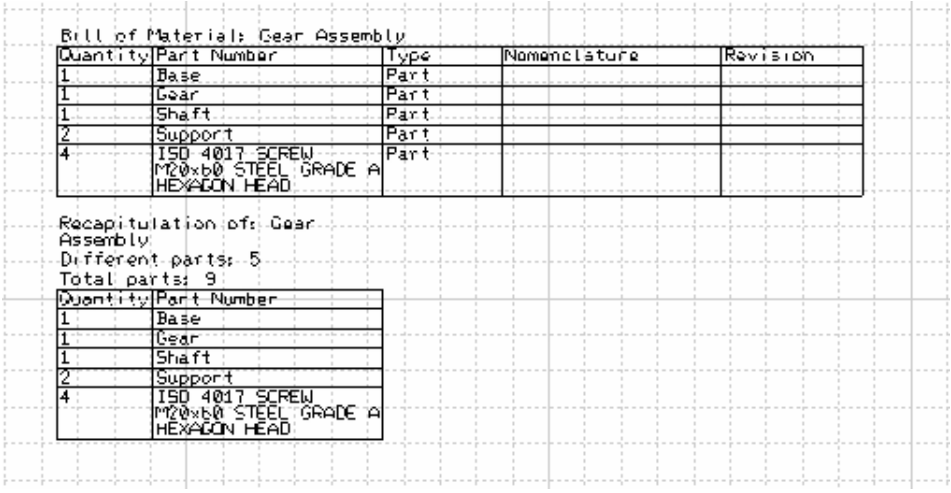

Bill of Material: Gear Assembly

Quantity	Part Number	Type	Nomenclature	Revision
1	Base	Part		
1	Gear	Part		
1	Shaft	Part		
2	Support	Part		
4	ISO 4017 SCREW M20x60 STEEL GRADE A HEXAGON HEAD	Part		

Recapitulation of: Gear Assembly
Different parts: 5
Total parts: 9

Quantity	Part Number
1	Base
1	Gear
1	Shaft
2	Support
4	ISO 4017 SCREW M20x60 STEEL GRADE A HEXAGON HEAD

Assembly Drafting – *BALLOON*

To generate balloons on drafting it is necessary to generate the numbers in assembly.

Go to Assembly Workbench and select ***Generate Numbering*** option icon in the ***Product Structure Toolbar***.

You can choose the mode of numbering: *Numbers* or *Letters*.

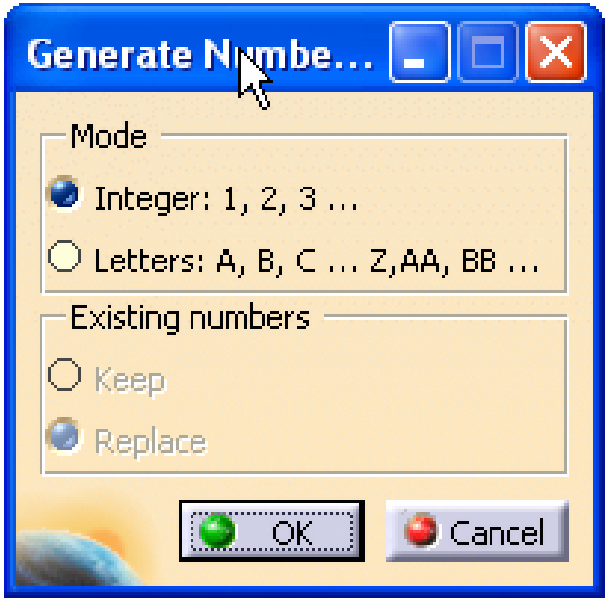

You must save your assembly.

Assembly Drafting – *BALLOON*

Go to Drafting Workbench and select ***Edit/Update Current Sheet*** (if active) to update last changes in your assembly.

Select ***Insert/Generation/Balloon Generation*** option.

All balloons are generated in active view (red squared view).

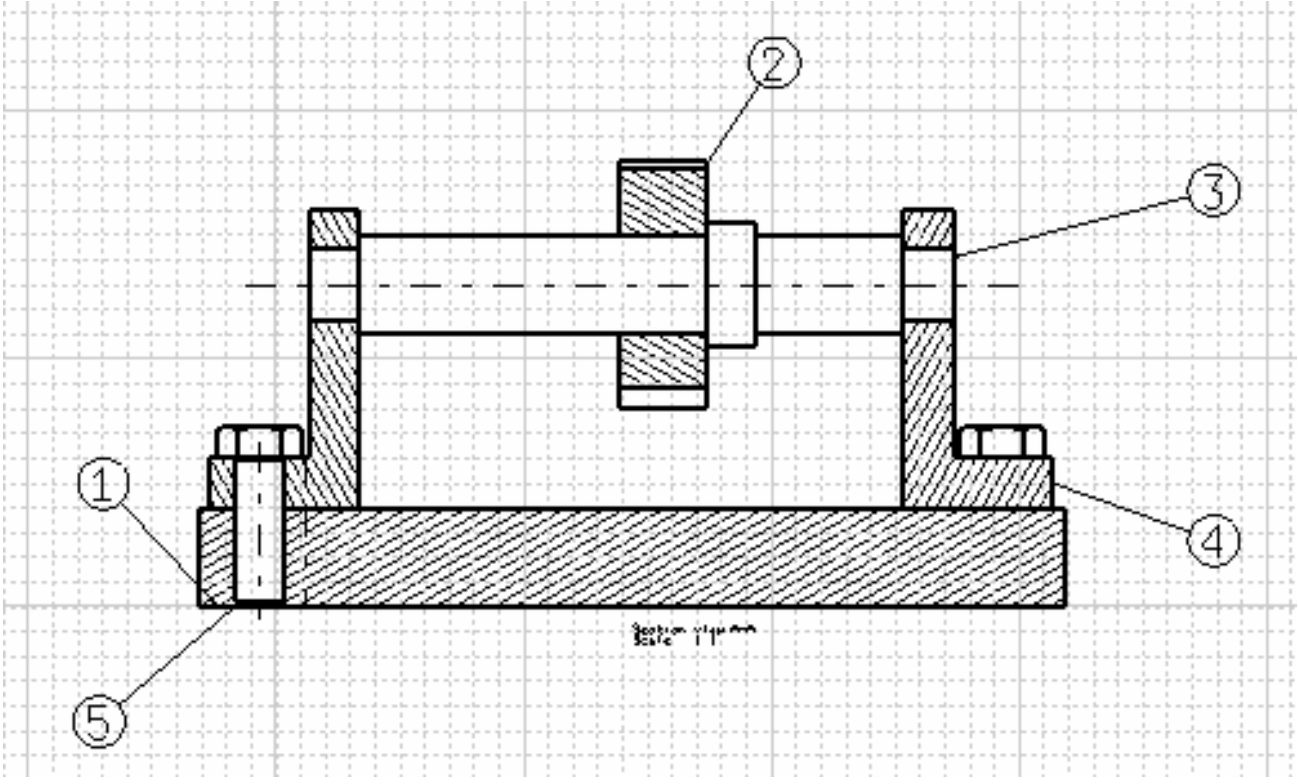

Assembly Drafting – *EXPLODE view*

You can also add to the drafting exploded view.
First you have to create explode in assembly.

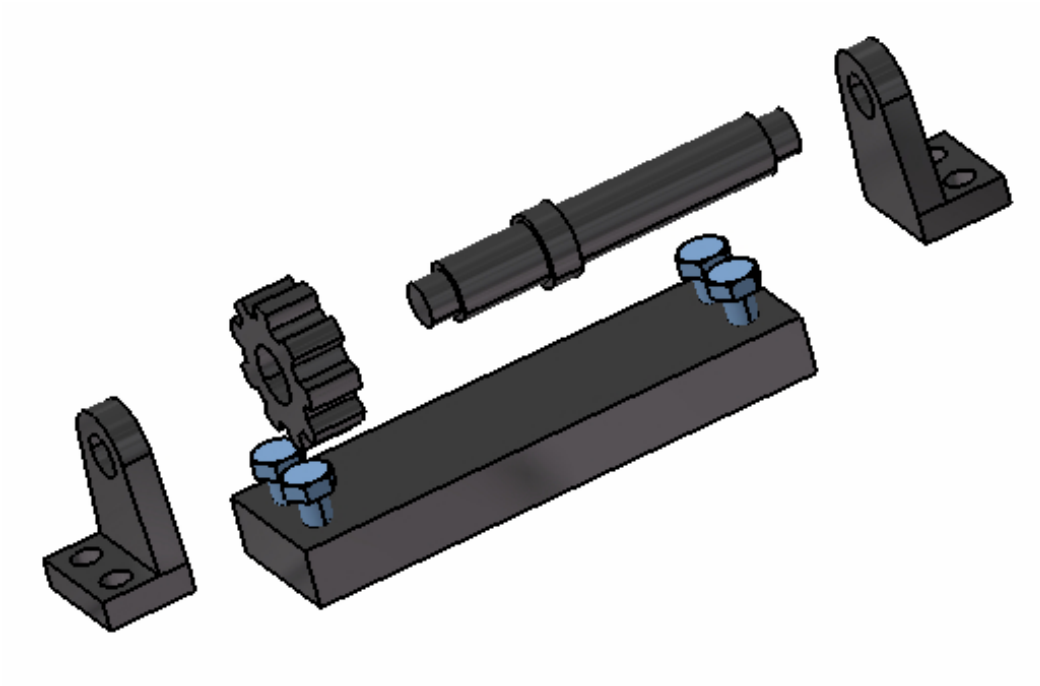

Assembly Drafting – *EXPLODE view*

Next select ***Insert/Views/Projections/Isometric*** in *Drafting Workbench*, then choose the reference plane in *Assembly Workbench*.

Now you can manipulate the view and accept them.